www.ct-micro.com

CTR215-M4

4-Pin Mini-Flat DMC-Isolator®

Opto MOS Relays

Features

- High isolation 3750 V_{RMS}
- OFF-state output terminal voltage: 100 V
- Typical ON-state resistance: 0.6 Ω
- Operating Temperature range - 40 °C to 85 °C
- Creepage distance ≥ 5mm
- Distance Through Isolation > 0.4mm
- RoHS and REACH Compliance
- Halogen Free Compliance
- MSL class 1
- Regulatory Approvals
  - ✓ UL - UL1577 (E364000)
  - ✓ VDE - EN60747-5-5(VDE0884-5)
  - ✓ CQC – GB4943.1, GB8898 (14001105803)
  - ✓ IEC62368 (FI/41119)

Description

The CTR215-M4 (1-form-A) consists of two MOSFET and one photovoltaic chip optically coupled to an Infrared-emitting diode in 4-lead Mini-Flat package.

Applications

- Battery Management System (BMS)
- Security Systems
- Smart Meters
- Mechanical relay replacements
- General telecom switching
- Industrial controls
- Automatic measurement equipment

Package Outline

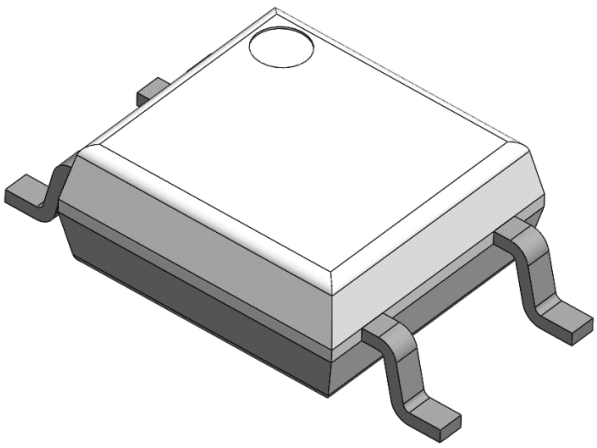

Schematic

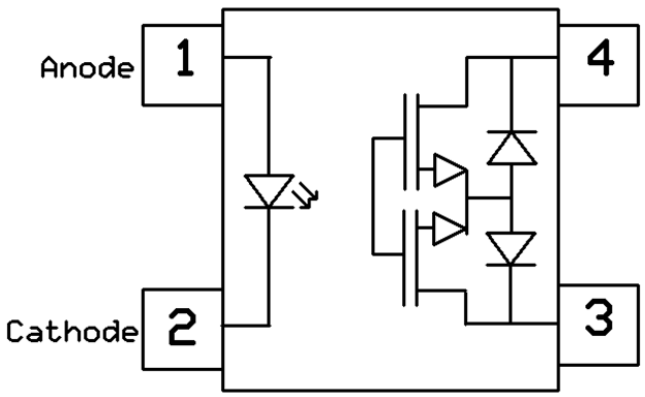

© 2022 CT MICRO INTERNATIONAL CORPORATION
ALL RIGHTS RESERVED.

Absolute Maximum Ratings T_A = 25°C, unless otherwise specified

Stresses in excess of the absolute maximum ratings can cause permanent damage to the device. Functional operation of the device is not implied at these or any other conditions in excess of those given in the operational sections of this document. In addition, extended exposure to stresses above the recommended operating conditions may affect device reliability. The absolute maximum ratings are stress ratings only.

Symbol	Parameters	Ratings	Units	Notes
V_{ISO}	Isolation voltage (AC, 1 minute, 40 ~ 60% R.H.)	3750	Vrms	
V_{IORM}	Maximum repetitive peak isolation voltage	707	V_{peak}	
V_{PR}	Input-to-Output Test Voltage, Method b, V_{IORM} × 1.875 = V_{PR}, 100% Production Test with t_m = 1 sec, Partial Discharge < 5 pC	1326	V_{peak}	*1*
V_{PR}	Input-to-Output Test Voltage, Method a, V_{IORM} × 1.6 = V_{PR}, Type and Sample Test, t_m = 10sec, Partial Discharge < 5 pC	1132	V_{peak}	*1*
V_{IOTM}	Maximum transient isolation voltage	6000	V_{peak}	
T_{OPR}	Operating temperature	-40 ~ +85	°C	
T_{STG}	Storage temperature	-40 ~ +100	°C	
T_{SOL}	Soldering temperature (For 10 seconds)	260	°C	
Emitter				
I_F	Forward current	50	mA	
$I_{F(TRANS)}$	Peak transient current (≤1μs P.W,300pps)	1	A	
V_R	Reverse voltage	5	V	
P_C	Power dissipation	85	mW	
T_j	Junction Temperature	115	°C	
Detector				
V_{OFF}	OFF-state output terminal Voltage	100	V	
I_{ON}	ON-state Current	0.5	A	
P_o	Output Power dissipation	375	mW	
T_j	Junction Temperature	125	°C	
T_{jA}	Junction to Ambient Temperature	60	°C	

Notes

1. Refer to the front of the optocoupler section of the current catalog, under Product Safety Regulations section, IEC/EN/DIN EN 60747-5-5, for a detailed description

© 2022 CT MICRO INTERNATIONAL CORPORATION
ALL RIGHTS RESERVED.

Recommended Operating Conditions

Symbol	*Parameters*	*Min*	*Typ*	*Max*	*Units*
V_{DD}	Supply Voltage	-	-	80	V
I_{FT}	Trigger LED Current	5	10	20	mA
T_{OPR}	Operating temperature	-40	-	60	℃

© 2022 CT MICRO INTERNATIONAL CORPORATION
ALL RIGHTS RESERVED.

Electrical Characteristics T_A = 25°C, unless otherwise specified

Emitter Characteristics

Symbol	Parameters	Test Conditions	Min	Typ	Max	Units	Notes
V_F	Forward voltage	I_F = 10mA	-	1.4	1.6	V	
I_R	Reverse Current	V_R = 6V	-	-	5	μA	
C_{IN}	Input Capacitance	f= 1MHz	-	30	-	pF	

Detector Characteristics

Symbol	Parameters	Test Conditions	Min	Typ	Max	Units	Notes
I_{OFF}	OFF-state Current	V_{OFF} =100V	-	-	1	uA	
C_{OFF}	Output Capacitance	V_O= 0V, f=1 MHz	-	30	-	pF	

Transfer Characteristics

Symbol	Parameters	Test Conditions	Min	Typ	Max	Units	Notes
I_{FT}	Trigger LED Current	I_{ON} =Max	-	1.5	3	mA	
R_{ON}	ON-state resistance	I_{ON} =Max, I_F =5 mA , t < 1s	-	0.6	1.5	Ω	

Switching Characteristics

Symbol	Parameters	Test Conditions	Min	Typ	Max	Units	Notes
T_{ON}	Turn-on Time	R_L=200Ω, V_{DD}=20V, I_F=5mA	-	1	3	ms	
T_{OFF}	Turn-off Time	f=100Hz	-	0.3	2	ms	

© 2022 CT MICRO INTERNATIONAL CORPORATION
ALL RIGHTS RESERVED.

Typical Characteristic Curves *T_A = 25°C, unless otherwise specified*

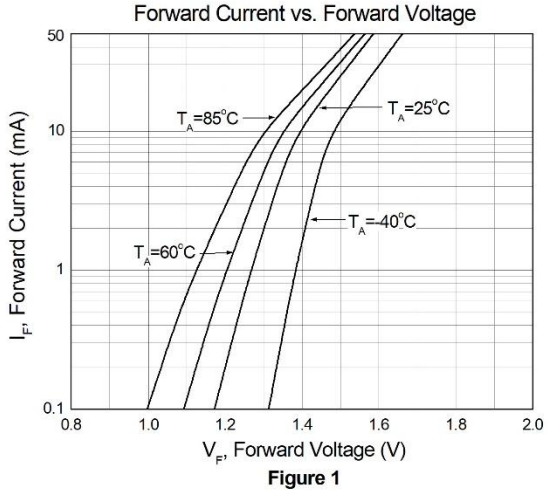

Figure 1

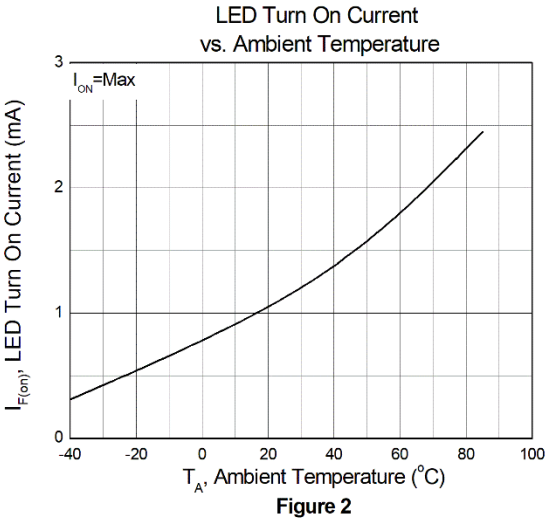

Figure 2

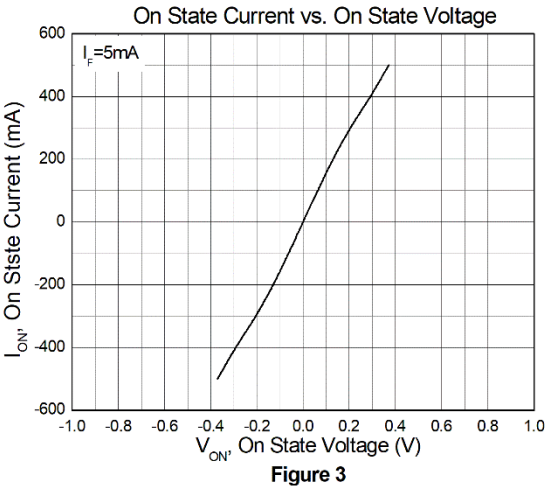

Figure 3

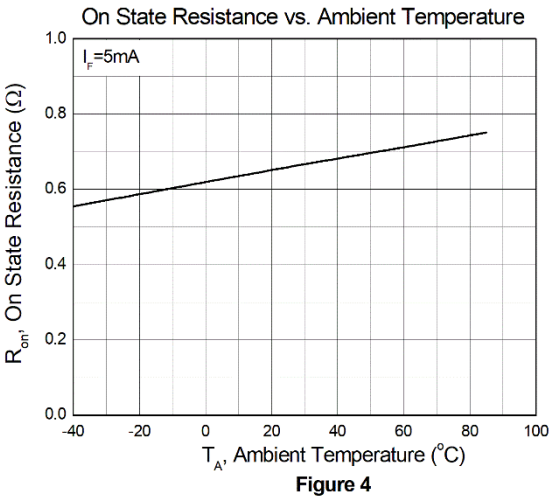

Figure 4

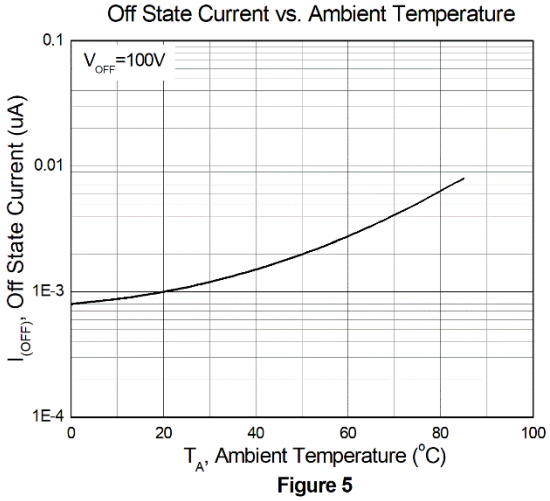

Figure 5

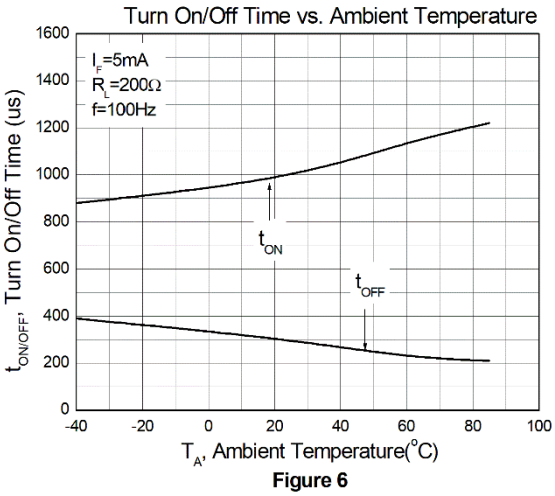

Figure 6

© 2022 CT MICRO INTERNATIONAL CORPORATION
ALL RIGHTS RESERVED.

Typical Characteristic Curves *T_A = 25°C, unless otherwise specified*

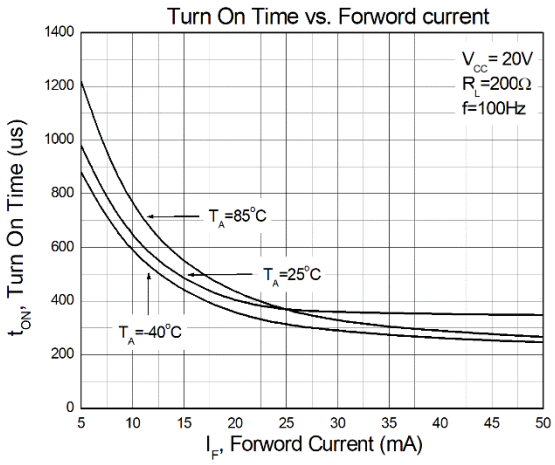

Figure 7

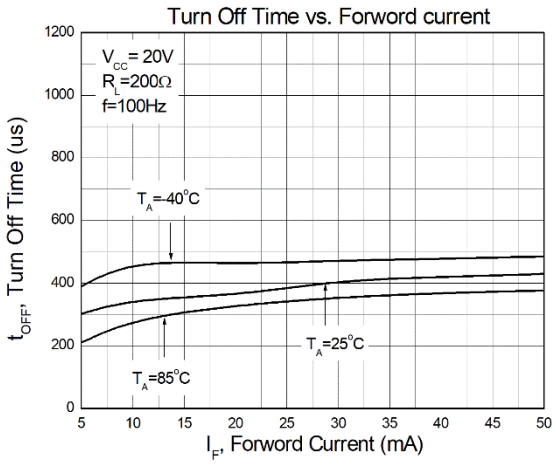

Figure 8

Test Circuit

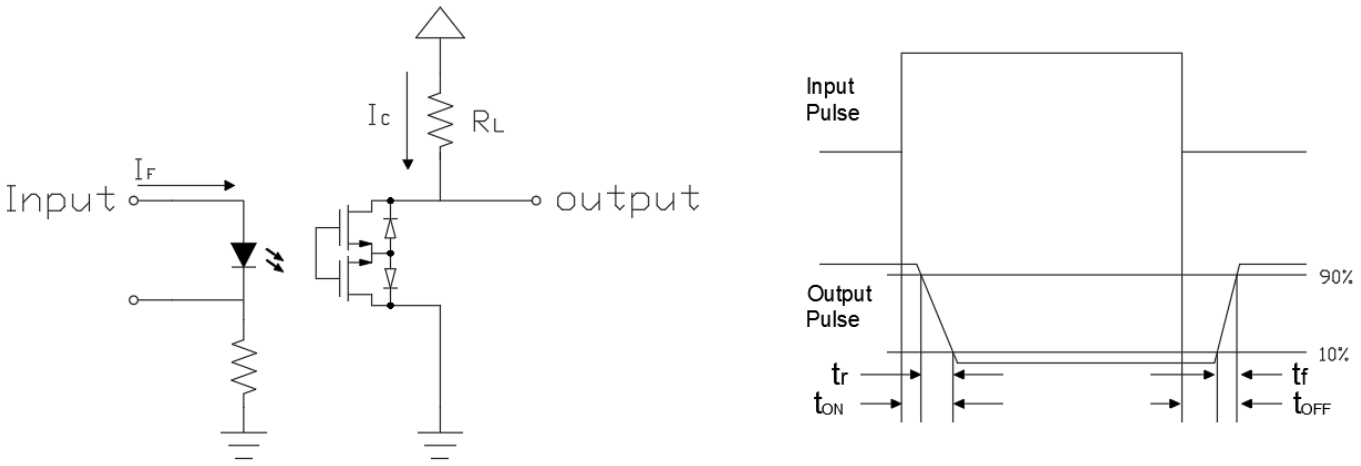

Figure 9: Switching Time Test Circuits

© 2022 CT MICRO INTERNATIONAL CORPORATION
ALL RIGHTS RESERVED.

Package Dimension *Dimensions in mm unless otherwise stated*

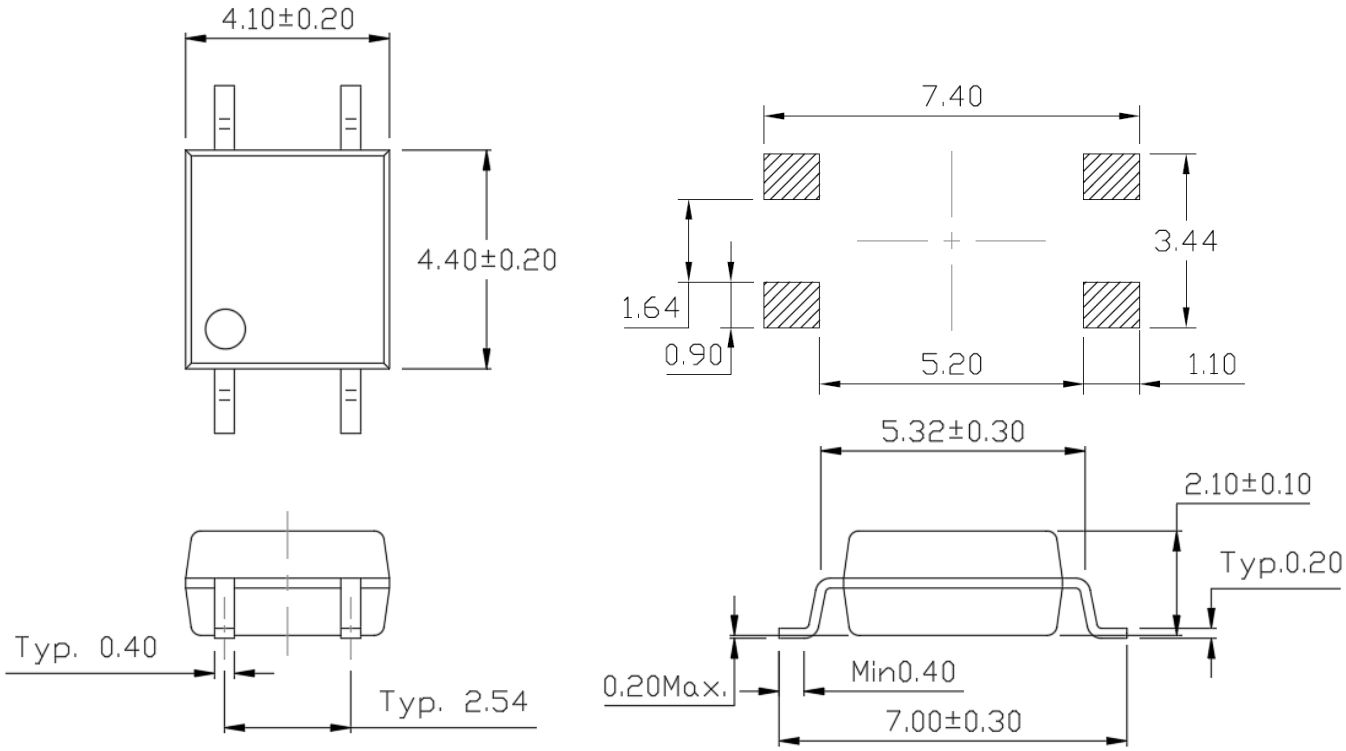

Marking Information

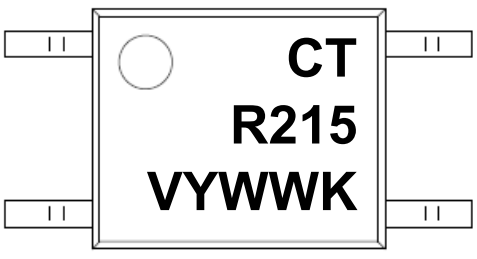

Note:

CT	: Denotes “CT Micro”
R215	: Part Number
X	: Option (Blank, A or B)
V	: VDE Safety Mark Option (Blank or V)
Y	: One Digit Year Code
WW	: Two Digit Work Week
K	: Manufacturing Code

© 2022 CT MICRO INTERNATIONAL CORPORATION
ALL RIGHTS RESERVED.

Ordering Information

CTR215(V)(Z)-M4

CT = Denotes “CT Micro”

R215 = Part Number

V = VDE Safety Mark Option (Blank or V)

Z = Tape and Reel Option (T1 or T2)

M4 = MFP Package

Option	*Description*	*Quantity*
T1	Surface Mount Lead Forming – With Option 1 Tapping	3000 Units/Reel
T2	Surface Mount Lead Forming – With Option 2 Tapping	3000 Units/Reel

Reel Dimension *All dimensions are in mm, unless otherwise stated*

Option T1/T2

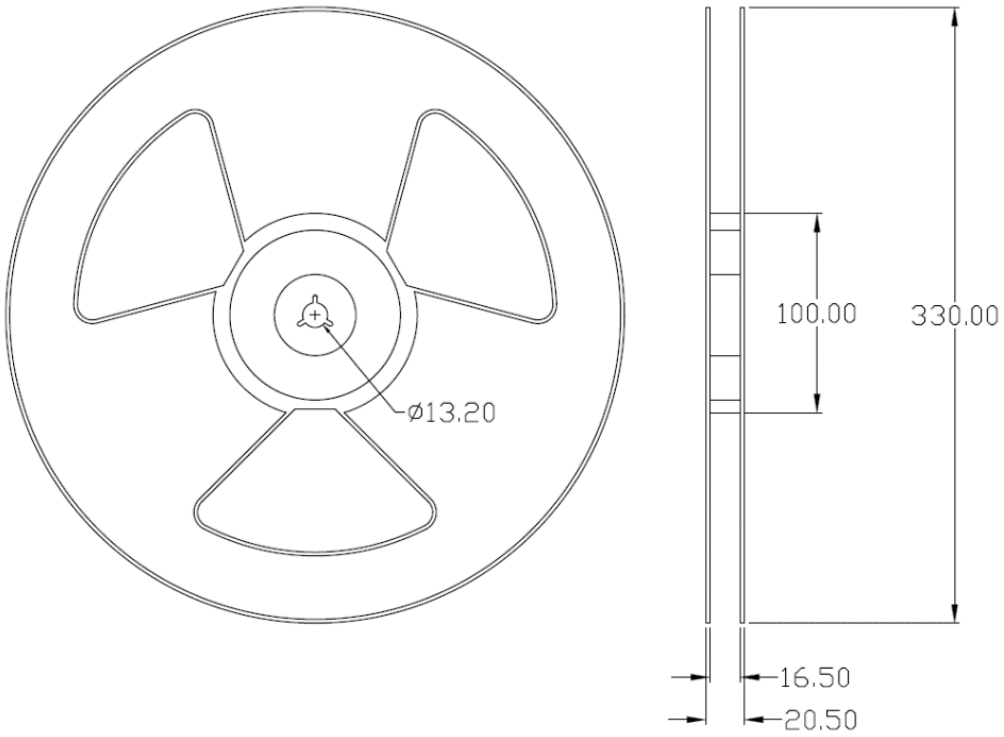

© 2022 CT MICRO INTERNATIONAL CORPORATION
ALL RIGHTS RESERVED.

Carrier Tape Specifications *Dimensions in mm unless otherwise stated*

Option T1

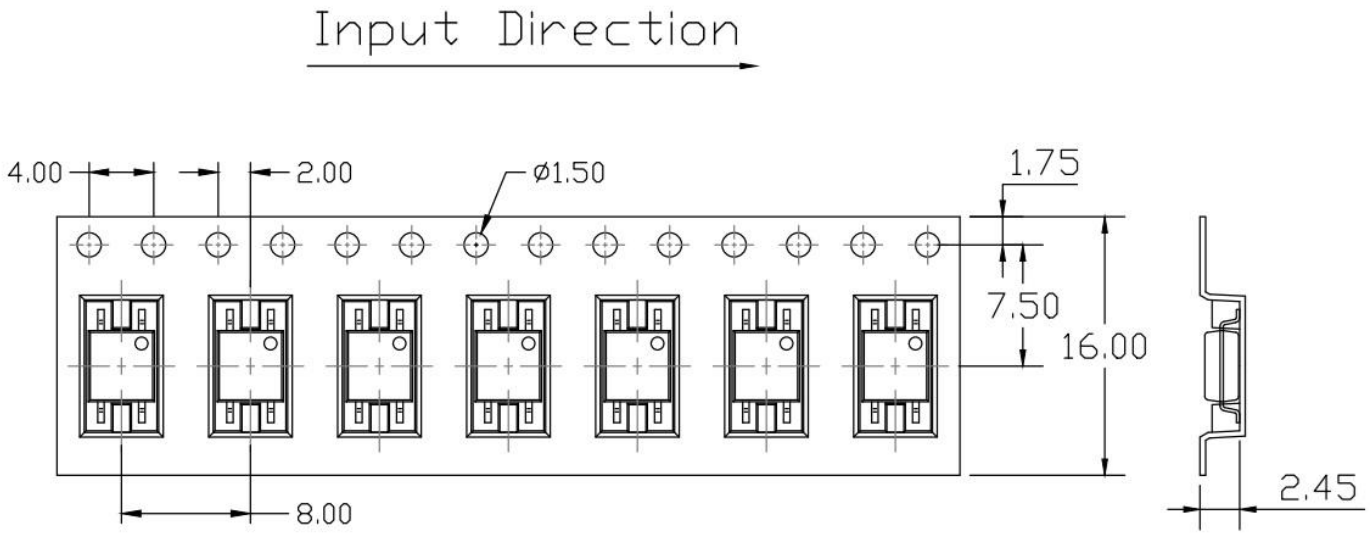

Option T2

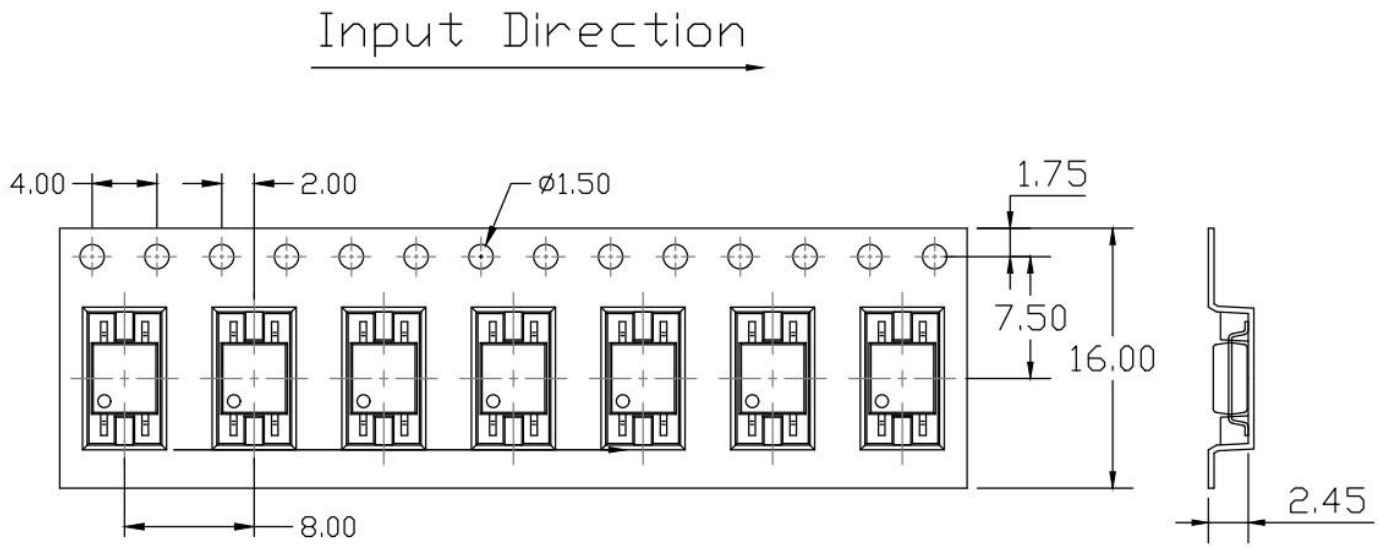

© 2022 CT MICRO INTERNATIONAL CORPORATION
ALL RIGHTS RESERVED.

Solderability spec (Follow the JEDEC standard JESD22-B102)

Reflow Soldering: Immersed surface, other than the end of pin as cut-surface, must be covered by solder.
Solder-Bath: More than 95% of the electrode must be covered with solder.

Wave soldering (Follow the JEDEC standard JESD22-A111)

One time soldering is recommended within the condition of temperature.
Temperature: 260+0/-5˚C.
Time: 10 sec.
Preheat temperature: 25 to 140˚C.
Preheat time: 30 to 80 sec.

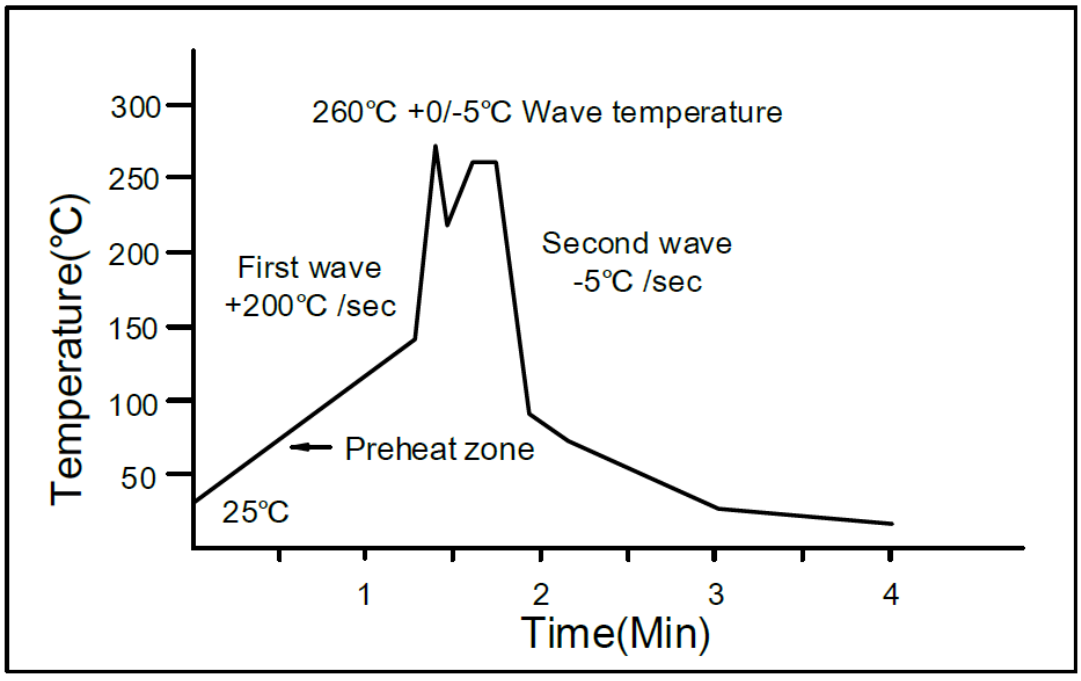

Iron soldering (Follow the standard MIL-STD 202G, Method 210F)

Allow single lead soldering in every single process.
One time soldering is recommended. Temperature: 350±10˚C
Time: 5 sec max.

© 2022 CT MICRO INTERNATIONAL CORPORATION
ALL RIGHTS RESERVED.

Reflow Profile (Follow the JEDEC standard J-STD-020)

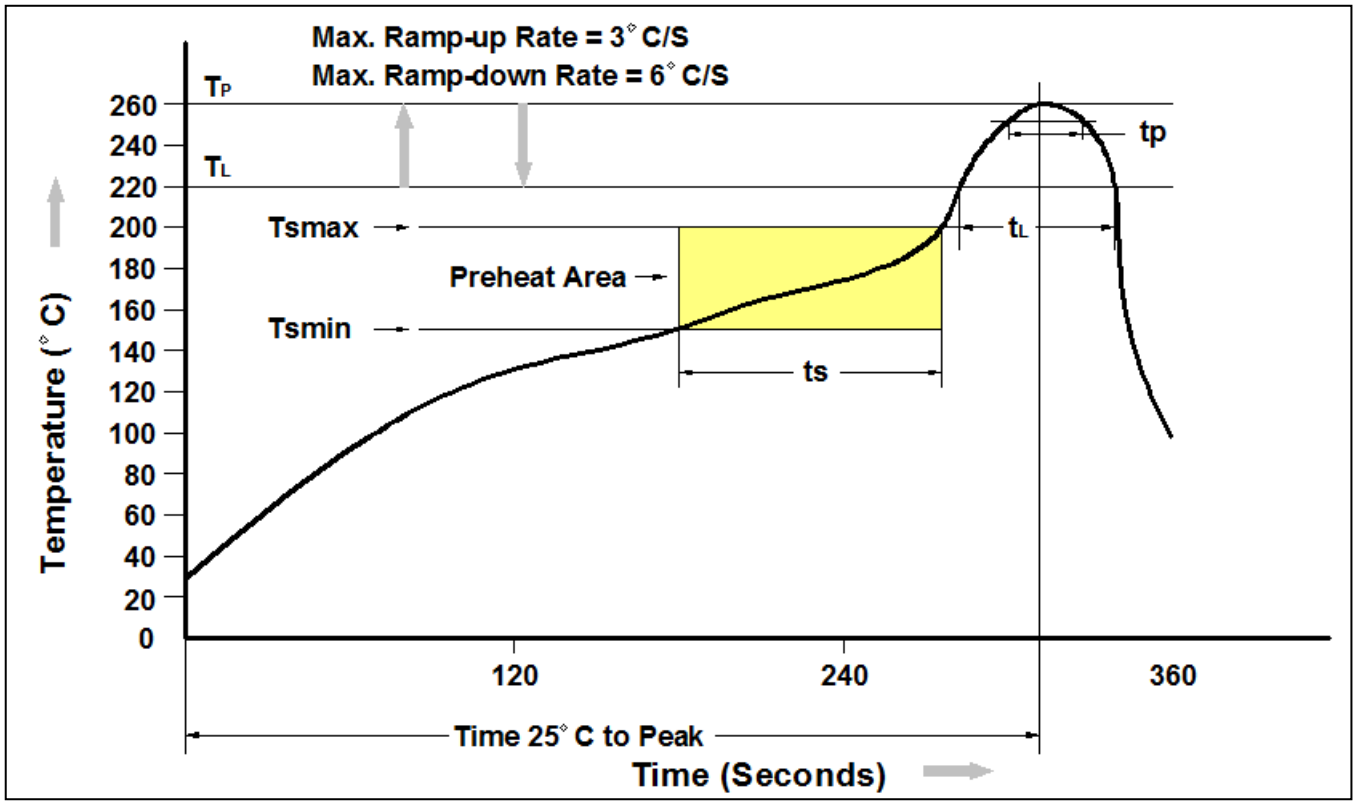

Profile Feature	Pb-Free Assembly Profile
Temperature Min. (Tsmin)	150°C
Temperature Max. (Tsmax)	200°C
Time (ts) from (Tsmin to Tsmax)	60-120 seconds
Ramp-up Rate (t_L to t_P)	3°C/second max.
Liquidous Temperature (T_L)	217°C
Time (t_L) Maintained Above (T_L)	60 – 150 seconds
Peak Body Package Temperature	260°C +0°C / -5°C
Time (t_P) within 5°C of 260°C	30 seconds
Ramp-down Rate (T_P to T_L)	6°C/second max
Time 25°C to Peak Temperature	8 minutes max.

© 2022 CT MICRO INTERNATIONAL CORPORATION
ALL RIGHTS RESERVED.

DISCLAIMER

DMC-Isolator® IS A TRADEMARK OF CT MICRO INTERNATIONAL CORPORATION AND/OR ITS SUBSIDIARIES. CT MICRO OWNS THE RIGHTS TO A NUMBER OF PATENTS, TRADEMARKS, COPYRIGHTS AND OTHER INTELLECTUAL PROPERTY.

CT MICRO RESERVES THE RIGHT TO MAKE CHANGES WITHOUT FURTHER NOTICE TO ANY PRODUCTS HEREIN TO IMPROVE RELIABILITY, FUNCTION OR DESIGN. CT MICRO DOES NOT ASSUME ANY LIABILITY ARISING OUT OF THE APPLICATION OR USE OF ANY PRODUCT OR CIRCUIT DESCRIBED HEREIN; NEITHER DOES IT CONVEY ANY LICENSE UNDER ITS PATENT RIGHTS, NOR THE RIGHTS OF OTHERS.

DISCOLORATION MIGHT OCCUR ON THE PACKAGE SURFACE AFTER SOLDERING, REFLOW OR LONG TERM USE. THIS DOES NOT IMPACT THE PRODUCT PERFORMANCE NOR THE PRODUCT RELIABILITY.

CT MICRO ARE NOT AUTHORIZED FOR USE AS CRITICAL COMPONENTS IN LIFE SUPPORT DEVICES OR SYSTEMS WITHOUT EXPRESS WRITTEN APPROVAL OF CT MICRO INTERNATIONAL CORPORATION.

1. *Life support devices or systems are devices or systems which, (a) are intended for surgical implant into the body, or (b) support or sustain life, or (c) whose failure to perform when properly used in accordance with instruction for use provided in the labelling, can be reasonably expected to result in significant injury to the user.*
2. *A critical component is any component of a life support device or system whose failure to perform can be reasonably expected to cause the failure of the life support device or system, or to affect its safety or effectiveness.*

© 2022 CT MICRO INTERNATIONAL CORPORATION
ALL RIGHTS RESERVED.